EHRLE®
www.ehrle.com
The better way to clean

Water Softener units

with DF120 CLACK, DF200 CLACK, DF300 CLACK

Duplex valve WS1CI TT

Assembly and Commissioning Instructions

Programming DF120

Level 2 Next + v for 5 sec. / 1x		
Operating mode	SOFTENING	
Press button SET/CLOCK		
Level 1 Next + v for 5 sec. / 2x		
Diameter of valve	1.0 r	
Pre Rinse	OFF	
External regeneration trigger	dp OFF	
HARDNESS	dH	
Programm step 1	BACKWASH	
Programm step 2	Dn BRINE	
Programm step 3	RINSE	
Programm step 4	FILL	
Programm step 5	END	
External power supply / Lo DC	OFF	
Level 2 Next + v for 5 sec. / 1x		
Operating mode	SOFTENING	
Duration of programm step 1 - BACHWASH	5 min.	
Duration of programm step 2 - dn BRINE	60 min.	
Duration of programm step 3 - RINSE	5 min.	
Duration of programm step 4 - FILL	7,2 Kg.	
CAPACITY on M^3	120	
Regeneration	Auto	
TIME REGEN	on 0	
rLY 1 (relay 1)	OFF	
rLY 1 (relay 2)	OFF	
REMAINING SALT	OFF	
Level 3 Next + ∧ for 5 sec. / 1x		
HARDNESS (lokal water hardness) individual	dH 20	
HARDNESS 2	dH 0	
REGEN DAY (forced regeneration)	OFF	
REGEN (not adjustable)	on 0 m^3	

Programming DF200

Level 2 Next + v for 5 sec. / 1x		
Operating mode	SOFTENING	
Press button SET/CLOCK		
Level 1 Next + v for 5 sec. / 2x		
Diameter of valve	1.0 r	
Pre Rinse	OFF	
External regeneration trigger	dp OFF	
HARDNESS	dH	
Programm step 1	BACKWASH	
Programm step 2	Dn BRINE	
Programm step 3	RINSE	
Programm step 4	FILL	
Programm step 5	END	
External power supply / Lo DC	OFF	
Level 2 Next + v for 5 sec. / 1x		
Operating mode	SOFTENING	
Duration of programm step 1 - BACHWASH	5 min.	
Duration of programm step 2 - dn BRINE	74 min.	
Duration of programm step 3 - RINSE	5 min.	
Duration of programm step 4 - FILL	12 Kg.	
CAPACITY on M^3	200	
Regeneration	Auto	
TIME REGEN	on 0	
rLY 1 (relay 1)	OFF	
rLY 1 (relay 2)	OFF	
REMAINING SALT	OFF	
Level 3 Next + ∧ for 5 sec. / 1x		
HARDNESS (lokal water hardness) individual	dH 20	
HARDNESS 2	dH 0	
REGEN DAY (forced regeneration)	OFF	
REGEN (not adjustable)	on 0 m^3	

Programming DF300

Level 2 Next + v for 5 sec. / 1x		
Operating mode	SOFTENING	
Press button SET/CLOCK		
Level 1 Next + v for 5 sec. / 2x		
Diameter of valve	1.0 r	
Pre Rinse	OFF	
External regeneration trigger	dp OFF	
HARDNESS	dH	
Programm step 1	BACKWASH	
Programm step 2	Dn BRINE	
Programm step 3	RINSE	
Programm step 4	FILL	
Programm step 5	END	
External power supply / Lo DC	OFF	
Level 2 Next + v for 5 sec. / 1x		
Operating mode	SOFTENING	
Duration of programm step 1 - BACHWASH	5 min.	
Duration of programm step 2 - dn BRINE	90 min.	
Duration of programm step 3 - RINSE	5 min.	
Duration of programm step 4 - FILL	18 Kg.	
CAPACITY on M^3	300	
Regeneration	Auto	
TIME REGEN	on 0	
rLY 1 (relay 1)	OFF	
rLY 1 (relay 2)	OFF	
REMAINING SALT	OFF	
Level 3 Next + ∧ for 5 sec. / 1x		
HARDNESS (lokal water hardness) individual	dH 20	
HARDNESS 2	dH 0	
REGEN DAY (forced regeneration)	OFF	
REGEN (not adjustable)	on 0 m^3	

Table of Contents

IMPRINT ..... FEHLER! TEXTMARKE NICHT DEFINIERT.
TABLE OF CONTENTS 2
1 ABOUT THESE INSTRUCTIONS 7
1.1 HAZARDS OF ELECTRICAL ENERGY 7
1.2 HAZARDS OF HYDRAULIC ENERGY 7
1.3 ABOUT SAFETY NOTICES AND GENERAL NOTES 8
1.4 WARRANTY AND LIABILITY 8
1.5 INFORMATION ABOUT PACKAGING AND TRANSPORT 9
1.6 STORAGE 9
1.7 UNPACKING THE COMPONENTS 9
1.8 FUNCTIONAL DESCRIPTION OF THE WATER SOFTENER 10
1.9 INTENDED USE 10
2 TECHNICAL DATA 11
3 SYSTEM ASSEMBLY 13
3.1 PRIOR TO ASSEMBLY 13
3.1.1 UNPACKING 13
3.1.2 INSTALLATION SITE 13
3.2 FILLING THE PRESSURE TANK 14
3.3 MOUNTING THE CONTROL VALVE TO THE PRESSURE TANK 15
3.4 INSTALLING CONNECTING PIPES 15
3.5 INSTALLING THE BYPASS 16
3.6 INSTALLING THE VERTICAL ADAPTER 16
3.7 INSTALLING THE BSPT CONNECTIONS 16
3.8 CONNECTING THE UNTREATED AND SOFT WATER LINES 17
3.8.1 REQUIREMENTS FOR INSTALLING THE UNTREATED AND SOFT WATER LINES 17
3.8.2 INSTALLING THE UNTREATED AND SOFT WATER LINES 17
3.9 CONNECTING THE BRINE HOSE 18
3.10 CONNECTING THE WASTEWATER LINES 19
4 PROGRAMMING INSTRUCTIONS 20
4.1 KEY FUNCTIONS 20
4.2 SETTING THE CLOCK (LEVEL 1) 20
4.3 SETTING THE PROGRAM SEQUENCE (LEVEL 1) 21
4.4 PROGRAM CONFIGURATION (LEVEL 2) 23
4.5 INSTALLATION / USER DISPLAYS (LEVEL 3) 25
4.6 GENERAL CONTROL DISPLAYS 26
4.7 DIAGNOSTIC DISPLAYS DURING THE FIRST PHASE 26
4.8 DIAGNOSTIC DISPLAYS IN PHASE TWO 28
5 COMMISSIONING 29
5.1 FILLING THE BRINE TANK 29
5.2 FLUSHING PRIOR TO INITIAL USE 29
5.2.1 FLUSHING THE RIGHT PRESSURE TANK 30
5.2.2 FLUSHING THE LEFT PRESSURE TANK 30
5.2.3 IMPORTANT INFORMATION ABOUT BRINE FORMATION TIME 31
5.3 NON-STOP OPERATION 32

Table of Contents

6 WATER SOFTENER OPERATING CYCLES 33

6.1 OPERATION (NON-STOP OPERATION) 33
6.2 BACKWASHING (CLEANING AND LOOSENING THE RESIN BED) 33
6.3 BRINE (RESIN BED REGENERATION) 34
6.4 FAST RINSE 35
6.5 FILLING THE BRINE TANK 35

7 MAIN CONTROL VALVE TECHNICAL DETAILS 36

7.1 IMAGE AND DRAWING OF THE MAIN CONTROL VALVE 36
7.2 EXPLOSIVE DRAWING - MAIN CONTROL VALVE 37
7.3 BYPASS VALVE 38

8. TROUBLESHOOTING (CONTROL VALVE) 40

9 WS1 INSTALLATION SPANNER 45

..... FEHLER! TEXTMARKE NICHT DEFINIERT.

1 About these instructions

These instructions are for a volume-based duplex water softener.

- Please note, the operating and programming instructions are intended for qualified specialists.
- Please carefully read the operating instructions prior to initial use.
- Observe the basic safety instructions.
- Observe the instructions related to actions.
- Keep all documents included with this system in a location where they can be referenced when necessary.
- When passing the product along to others, include all documents included with this system.

1.1 Hazards of electrical energy

- Work on the electrical equipment must be carried out by a certified electrician.
- Routinely inspect the electrical equipment of the system.
- Immediately repair loose connections and scorched cables.
- If live parts must be worked on, seek the assistance of a second person to switch off the main switch in an emergency.

1.2 Hazards of hydraulic energy

- Work on hydraulic equipment must be carried out by persons with special hydraulics knowledge and experience.
- Depressurize sections and pressure lines which must be opened before starting repairs.

EHRLE GmbH assumes no liability
for damages due to failure to observe these instructions.

1.3 About safety notices and general notes

General notes are marked as follows:

NOTE	**General note with important information.**
CAUTION	**Hazards which may result in property damage if damage occurs, meaning damaging the system or the work piece.**

General notes use the following symbols:

This symbol indicates information.

This symbol indicates a general note.

This symbol indicates a potentially dangerous situation

The water softener must be installed in compliance with DIN EN 1988, as well as DVGW work sheet W 503 and W 504.

During installation, observe the OEM instructions for the main control valve WS1 CI Twin Twin.

Only carry out work specified in these instructions.

Do not alter or modify the system.

Always unplug the power plug before working on the valve.

1.4 Warranty and Liability

Warranty and liability claims for personal injury and property damage due to one or more of the following causes are excluded:

- Improper system use.
- Improper system assembly, commissioning, operation and maintenance.
- Operating the system with defective safety equipment or incorrectly installed or inoperable safety devices and guards.
- Failure to observe the information in the operating instructions (regarding; transportation, storage, assembly, commissioning, operation, maintenance and equipping) the system.
- Unauthorized structural changes to the system.
- Improper monitoring of system parts subject to wear.
- Improper repairs.
- Emergencies due to foreign objects and force majeure.

1.5 Information about packaging and transport

- If possible, pack the water softener on an IPPC Euro pallet.
- Protect components from moisture during transport.
- Protect components from frost during transport.

1.6 Storage

- Keep exchanger resin moist and keep from drying out.
- Keep exchanger resin frost-free.
- Keep the pressure tank away from sunlight to prevent ageing.
- Store the pressure tank protected from shock.
- Store the main control valve and electronic components dry.
- Store hardware in the clean, dry brine tank.

1.7 Unpacking the components

Systems size VAD 25, 50 and 75 are factory prefilled, with the main control valve preinstalled (without connecting pipes). The VAD 125 is not filled at the factory due to its weight. With this type of system, the ion exchanger resin, the support gravel, the pressure tank, the riser, the main control valve and the brine tank are delivered as separate parts.

NOTE

Unload the shock-sensitive pressure tanks with care.
Lift the pressure tanks during transport.
Never roll pressure tanks!!

1.8 Functional description of the water softener

EHRLE duplex water softener use the ion exchanger principle. Hardeners in the water, Calcium (Ca) and Magnesium (Mg) are replaced with Sodium ions (Na^+) in the filter bed. This achieved by using a strong acid cation resin in sodium form (softening resin).

During regeneration, common salt removes the hardeners calcium (Ca) and magnesium (Mg) from the resin and flushes these out in the wastewater.

1.9 Intended use

- **The EHRLE duplex water softener may only be used to soften drinking and service water.**
- **The limits in the technical data apply; pressure, temperature and flow rate.**
- **Intended use also includes observing all information in the operating instructions and complying with the inspection and service schedule.**
- **Improper use includes:**
  - **Filter (mech. filtration without brine regeneration)**
  - **Storage tank (after removing the ion exchanger material)**
  - **Pressure reservoir (water or air)**
- **Do not modify, install add-ons or convert the system without the written approval of the manufacturer / supplier.**
- **Immediately replace any parts which are not in excellent condition; only replace with original parts. There is no guarantee that third-party parts have been designed properly for their function, demand and safety.**
- **Any other use of the EHRLE duplex water softener is considered improper use.**
- **EHRLE Watertechnology GmbH assumes no liability for damages due to failure to observe this notice. The user is solely liable for the risk.**
- **The operating instructions must be observed to ensure proper operation and warranty claims.**
- **Therefore, first use the operating instructions before working on the water softener!**

2 Technical data

VAD CI 1" TT duplex water softeners with separate brine tank.
For softening drinking and service water.

Includes:

- 2 top quality pressure tanks made from corrosion-resistant GRP, filled with softening resin type Purolite C 100 E, for softening water.
- **Main control valve by CLACK, Model WS 1 CI TWIN TWIN** (TT) (volume-based) made from Noryl® with connection line to the second pressure tank
- 1 separate brine tank with sieve bottom.

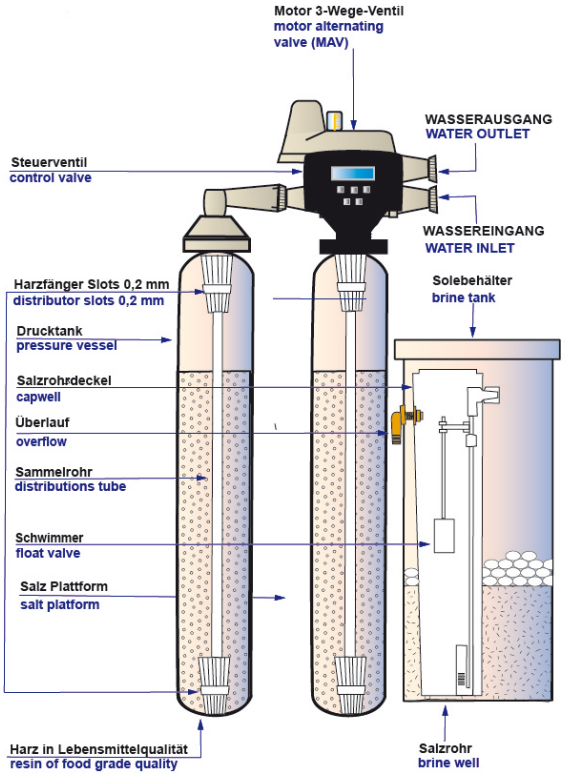

Image 1. duplex water softener components

Features & functionality

- Softening resin, Na form, approved for drinking water and food.
- Full regenerability with NaCl (discharging Ca and Mg)
- Programmable cycle times
- Reliable, multi-stage program control
- Extended operating data logging
- Optical sensor for accurate cycle configuration
- Connection piping with sampling
- Non-stop 24/7 operation through automatic switchover (multiway switching)
- LCD display for easy programming
- Clock memory during power outages
- Program saved to memory, will not be lost in power outages
- Displays remaining capacity / time before switching over and displays current flow rate

Specifications		VAD 30 TT	VAD 50 TT	VAD 75 TT
Weight				
(Net weight with resin)	[kg]	85	140	200
(Operating weight)	[kg]	120	270	340
Softener design		Duplex	Duplex	Duplex
Capacity per tank	(°dH × m³)	120	200	300
Resin tank size	[Litre]	37	75.6	103.1
Pressure tank type	[inch]	10x35	12x48	13x54
H	[mm]	901 - 905	1232 - 1238	1367 - 1375
Ø	[mm]	257	304	334
Brine tank		SBE100	SBE200	SBE200
H	[mm]	630	1000	1000
Ø	[mm]	467	530	530
Footprint				
W	[mm]	1200	1600	1700
D	[mm]	500	500	500
Gravel support layer Grain size (2.0 - 3.15 mm)	[kg]	no	no	no
Resin quantity	[Litre]	2x30	2x50	2x75
Water connections	[inch]	1" ET	1" ET	1" ET
Control head size	[inch]	1" ET	1" ET	1" ET
Height of salt grid	[mm]	150	200	200
Water usage / regeneration	[Litre]	260	500	720
Regeneration time	[min.]	76	109	127
Max. regeneration flow rate	[L/min.]	*12	*19	*25
Kv value	[m³/h]	3.7	3.7	3.7
Salt usage per regeneration	[kg]	3.75	7.50	11.25
Minimum pressure	[bar]	2	2	2
Maximum pressure	[bar]	6	6	6
Ambient temperature	[°C]	4 - 43	4 - 43	4 - 43
Water temperature	[°C]	4 - 43	4 - 43	4 - 43

Power supply	VAD 30 TT	VAD 50 TT	VAD 75 TT
Power supply voltage	220-240V / 50/60 Hz. *100-120V / 50/60 Hz.	220-240V / 50/60 Hz. *100-120V / 50/60 Hz.	220-240V / 50/60 Hz. *100-120V / 50/60 Hz.

* only available with US plug

Operating conditions	
pH operating range	6-10
Free chlorine Cl_2 working range	(max.) 0.1 mg/L (continuous duty)
Free chlorine Cl_2 stability	(max.) 2.0mg/L (temporary load)

Transport and storage conditions	
Storage temperature range	+4°C to +43°C (protect from frost!)
Relative humidity	Up to 80% at 20°C (non-condensing)

3 System assembly

3.1 Prior to assembly

CAUTION

The fused electrical connection must be installed within range of the mains connection.

Never interrupt the electrical connection.

Never connect the electrical connection to a light cable

NOTE

The installation site must be level and clean.

The installation room must be frost-free and sufficiently ventilated.

The temperature in the installation room must not exceed 43 °C.

The wastewater connection on site must be a free outlet per DIN EN 1717 with the recommended usable cross-section (recommended NW 70).

The water system must be located near the wastewater connection.

The untreated water must have a minimum pressure of 2 bar.

The untreated water pressure must not exceed 6 bar.

3.1.1 Unpacking

NOTE

Unload the shock-sensitive pressure tanks with care.

Lift the pressure tanks during transport, never roll!!

3.1.2 Installation site

Verify all installation requirements are met.

A level surface is required to ensure the pipes of the system are tension free. If the surface is not level, build a foundation with a minimum size to fit the pressure tank feet. Remember the brine tank must be placed near the pressure tank.

3.2 Filling the pressure tank

Fill the pressure tanks successively in the following order:

1. Align the pressure tanks on a level surface.
2. Screw the part of the main control valve containing the electronics (central unit with display) onto the pressure tank on the right. Align the pressure tank so the display faces the desired direction. Screw the second part of the central control system, the connection adapter which connects to the main unit of the main control valve (right pressure tank) via two pipes, onto the left pressure tank. Turn the pressure tank with adapter so the openings for connecting the two connecting pipes face the connection openings in the main part of the control head (right pressure tank). Now align the two pressure tank so the spacing between the two system parts allow connecting the connection pipes without strain.
3. Remove the control valve from the right pressure tank and the connection adapter from the left pressure tank.

Image 2. Valve segments.

4. Verify the riser is centered in the pressure tank. If necessary, realign the riser so it is centered.
5. Seal the top opening of the riser with a suitable cap or adhesive tape to keep out support gravel or exchanger resin.
6. Now add water to the tank until it is approx. 20% full of water. Ensure the riser does not shift from the centre position or float.
7. First add the included support gravel to the tank, pushing the riser onto the bottom of the tank so the tube is upright in the middle of the tank.
8. Add the included ion exchanger resin to the tank.
9. After filling, slowly fill the water softener with water to approx. 10 cm above the resin bed.
10. Remove the cap or adhesive tape from the top opening of the riser. If necessary, remove any ion exchanger resin from the thread.

3.3 Mounting the control valve to the pressure tank

1. Grease the seals on the central unit (unit with display) of the control valve and the adapter (right pressure tank) with silicone grease.
2. Then install the upper baskets to the bottom of the central unit and the adapter. Take their large opening and insert these in the opening at the bottom of the central unit and the adapter. Turn anti-clockwise once so the basket locks into the opening in the opening. This is a so-called bayonet connector, not a screw thread. The basket cannot be removed once screwed in.
3. Slide the opening at the bottom of the basket over the top end of the riser and fix the central unit to the thread on the right pressure tank. Push the central unit down applying a little bit of pressure until the threads line up. Screw the central unit onto the thread and ensure the valve is correctly seated on the thread. It must turn easily at first. Finally, tighten the valve well by hand.
4. Proceed with the adapter per item 3 and screw it onto the left pressure tank.

NOTE

Tighten the swivel nuts on the main control valve by hand! Never use tools!!

3.4 Installing connecting pipes

Install the connection pipes between the central unit (right pressure tank) and the adapter (left pressure tank). To do so, slide the ends of the connection pipes into the Openings on the central unit and adapter. Tighten the swivel nuts at the end of the connection pipes by hand. Do not use tools. Seal with rubber O-rings.

NOTE

Ensure the black gaskets are inserted in the fittings. The white ring sits inside.
Now fasten with the black plastic swivel nuts.

3.5 Installing the bypass

On the right side of the central unit (right pressure tank) has two openings with external threads and arrows indicating the water inlet and outlet. The bypass mounts to these threads.

Image 3 water inlet / outlet and 4. Bypass.

3.6 Installing the vertical adapter

The 90° vertical adapters screw onto the bypass inlet and outlet.

Image 5. Vertical adapter.

3.7 Installing the BSPT connections

The BSPT pieces (**B**ritish **S**tandard **P**ipe **T**hread) then screw onto the inlet and outlet as the transition to European threads. These two BSPT pieces are inside a plastic bag along with installation instructions. The description is titled: WS Fitting 1.25" Plastic BSPT.

Image 6. BSPT pieces.

Assemble the parts as shown in the drawing in the instructions and screw the two pieces including swivel nut onto the inlet and outlet of the 90° vertical adapters. Tighten the swivel nuts by hand. These are sealed with O-rings and do **not** require tightening with pliers. The complete assembly will not be rigid once tightened, but can be moved.

Image 7 BSPT pieces

3.8 Connecting the untreated and soft water lines

3.8.1 Requirements for installing the untreated and soft water lines

- The untreated water must have a minimum pressure of 2.5 bar. If the pressure is below the minimum pressure, this may impair proper function of the main control valve.
- Never exceed the maximum operating pressure of 6 bar. If the line pipeline has high pressure, pressure peaks or line shock above 6 bar, a pressure reducing valve must be installed upstream of the water softener.
- The untreated water system must always have a suitable shut-off per DIN 1988.
- Install fine filters in the untreated water line to keep foreign objects out of the main control valve.

3.8.2 Installing the untreated and soft water lines

1. Bring the untreated water supply without narrowing cross-section toward the water softener and connect to the water inlet on the main control valve.
2. Bring the soft water outlet without narrowing cross-section toward the water softener and connect to the water outlet on the main control valve.
3. Use suitable means to support on-site connection lines or connection hoses to prevent tension in the connected piping.

NOTE

Tighten the swivel nuts by hand! Never use tools!!

3.9 Connecting the brine hose

CAUTION
Please do not add regeneration salt to the brine tank until after commissioning. **Adding regeneration salt to the brine tank sooner prevents proper monitoring of the water level in the brine tank.**

A semi-transparent hose (diameter 9.5 mm) connects the central unit of the control valve to the brine valve on the brine tank.

1. Firmly insert one end of the brine hose into the designated opening at the back of the central unit (see image).

Image 8. Brine hose connection on the control valve

Image 9. Brine hose end to the connection on the brine tank

2. First slide the black plastic nut over the other end of the brine hose as shown. Then first slide the white, then the black compression ring over the brine hose. (Attention: follow order).
3. Open the brine tank (remove cover) and remove the (round) cover on the brine pipe. The brine pipe holds the brine (suction) valve. Insert the end of the hose with the swivel nut through the side opening in the wall of the brine tanks (where the brine pipe is connected) into the tank, and screw onto the top end of the brine valve. Reattach the cover in the brine shaft.

NOTE
• **Use a kink-proof plastic hose as the brine hose from the brine tank to the main control valve.** • **Secure the brine hose against moving.** • **Keep the brine line as short as possible.** • **Avoid any cross-section constriction.** • **If possible, do not use elbows or adapters or use as few as possible to prevent pressure loss in the line.**

3.10 Connecting the wastewater lines

The central unit of the control valve (right pressure tank) must be connected to a drain pipe using a drain hose (hose clamp included). Connect and secure the hose to the grey 90° elbow at the back (left) of the central unit on the control valve. Absorb the weight of the drain hose by adequately (externally) securing the hose to relief strain on the connection angle on the control valve.

Image 10. Wastewater connection ¾", 13 mm on VAD 25, 50, 75 and 125

Run all wastewater lines from the central control valves and the overflow drain of the brine tank straight into a drain using a hose.

Run the hose from the top to the bottom so the wastewater can drain well.

Run the hose without narrowing cross-section and without kinking.

Secure the hose with a hose clamp.

NOTE

Ensure the hose is secured well to the drain pipe and cannot slip out, as the wastewater is pressurised as it is discharged and causes somewhat of recoil.

NOTE

If the wastewater connection is so far from the desired installation site that the included drain hose is not long enough, please use a longer hose of the same diameter or extend the included hose accordingly. You can also order the required drain hose length by the metre from your water softener dealer.

4 Programming instructions

Instructions for programming the EHRLE duplex water softener:
Clack Twin valve control with one WS 1 CI Twin-Twin Clack control valve.

4.1 Key functions

SET CLOCK	**Set clock.** **Overrides and saves the settings at the individual levels.**
NEXT	**At level 1 switches between capacity, time and current flow rate.** **At level 2, 3 and 4, switches between the various steps, shift key for accessing higher levels (combined with the arrow keys).** **Shift key for clearing errors (combined with the key "REGEN" key).**
REGEN	**Switches regeneration on / off.** **Press 3 seconds to automatically start backwashing.** **Saves the regeneration step.** **Clears the error (combined with the key NEXT).**
△ **and** ▽	**combined with the "NEXT" key and the arrow keys to access higher levels.** **Switches between different settings to level 2, 3, 4 in the respective steps.**

4.2 Setting the clock (Level 1)

To set the clock the **SET CLOCK** function key until the time change menu opens.

Here you can set the clock by selecting the desired hour using the arrow keys.

After making your entry, press the **NEXT** key to set the minutes.

Press the **NEXT** key again and the display will return to the top level and show the time.

The clock must be reset after the unit has been disconnected from power.

4.3 Setting the program sequence (Level 1)

a) Select operating mode (softening / filtering)

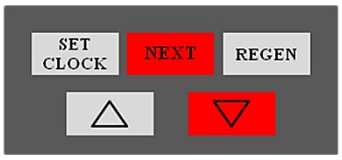

Simultaneously press the keys **NEXT** and ▽ for approx. 3 seconds to access level 1.

Hold the keys until the display level 1 opens.

The top left edge of the display will flash "**Softening**" or "**Filtering**". Use the arrow keys ▽ △ to select the flashing **"Softening"** option.

After selecting **"Softening",** simultaneously press the keys **NEXT** and ▽ until the "**Softening Program Sequence Settings"** menu opens.

NOTE

If the step does not appear within 5 seconds, the control valve is locked.
To unlock, successively press: ▽ NEXT △ SET CLOCK.

b) Selection the valve:

Choose from the following settings:

1.0, 1.0 Γ, 2.0, 1.5, 1.25. For valve WS 1" CI TT, use the ▽ △ keys to select the setting **1.0 Γ.**

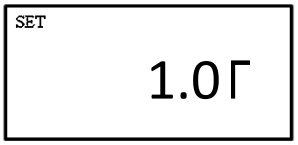

After making your selection, press the NEXT key.

c) Selecting the rinse option.

Set Rinse will appear.
Select **oFF.**

d) Setting the external regeneration.

The display will show **dP on 0, dPdEL, HoLD** or **dPoFF.**

When using external regeneration (dP switch on the board), please select an option.

- **dP on 0** – Regeneration starts immediately if the dP switch detects a signal for 2 minutes.
- **dPdEL** – Regeneration starts at the preset time if the dP switch detects a signal for 2 minutes.
- **HoLd** – Regeneration does not start until a storage tank is adequately filled. Otherwise it will first be filled.

When not triggering regeneration externally, select **dPoFF**.

After making your selection, press the **NEXT** key.

e) Setting the total hardness

Use the arrow keys ▽ △ to choose from the following total hardness units:

- Total hardness (American unit) e.g. 340 ppm
- Total hardness (German unit) e.g. 19°dH
- Total hardness (German unit) e.g. 34°fH

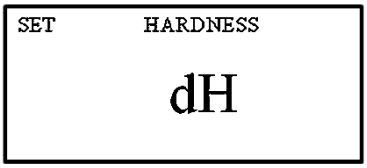

After making your selection, press the **NEXT** key.

f) Selecting the program steps

You will see the choices of program steps for the valve head to run successively.
Operating mode **"Softening"** has 5 program steps to choose from.
The display will show a number (1 – 5) for each program step.

1. **BACKWASH**
2. **BRINE dn** (brine at consistent current)
3. **RINSE** (fast rinse)
4. **FILL** (fill brine tank)
5. **END**

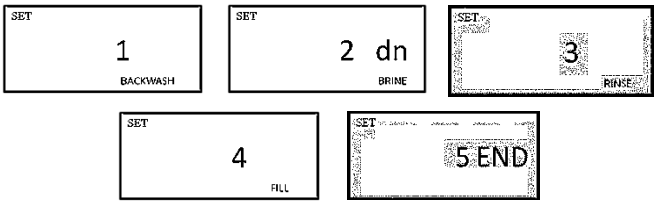

Image 16. Display readouts for program steps

Use the arrow keys ▽ △ to select the desired step for each NUMBER.

After selecting the desired step, press the **NEXT** key
to go to the next program step.

After configuring your settings, press the **SET CLOCK** key
to save these settings.

Press the **NEXT** key; the display will return to the top level and show either the **time, 0 L/min** or **Capacity Remaining x m³**. Press the **NEXT** key to switch between these 3 values.

g) Selecting external power source power source

The display will read **Lo DC**.
Select **oFF.**

4.4 Program configuration (Level 2)

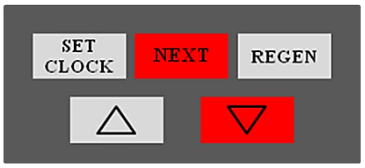

Simultaneously press the keys **NEXT** and ▽ to access Level 2.

Hold the keys approx. 5 sec. until the display level 2 opens.

If the display flashes **"Softening"**, press the **NEXT** key.

If the display flashes **"Filtering"**, use the arrow keys ▽ △ to select **"Softening"**.

Then also press the **NEXT** key.

NOTE

If the step does not appear within 5 seconds, the control valve is locked.

To unlock, successively press: ▽ NEXT △ SET CLOCK.

a) Setting the "BACKWASH" time

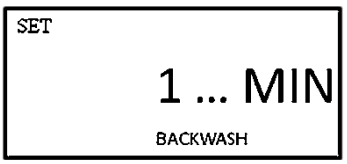

The number **"1"** will appear (for program step 1) with **"BACKWASH"** below**.**

A number will flash at the right of the display, followed by the unit min.

Now use the arrow keys ▽ △ to select the number of minutes to backwash.

Please refer to the settings log for the respective system size for the time to enter.

After making your selection, press the **NEXT** key.

b) Setting the "BRINE DN" time (softening in consistent current)

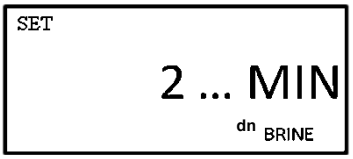

The number **"2"** will appear (for program step 2) and **"dn BRINE"** below**.**

A number will flash at the right of the display, followed by the unit min.

Now use the arrow keys ▽ △ to select the number of minutes for the brine process.

Please refer to the settings log for the respective system size for the time to enter.

After making your selection, press the **NEXT** key.

c) "RINSE" timing (fast rinse)

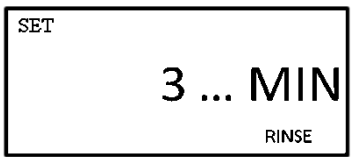

The number **"3"** will appear (for step 3) and **"RINSE"** below.

A number flashing with the unit Minutes will appear on the right of the display.

Now use the arrow keys ▽ △ to select the number of Min. for how long to rinse.

Please refer to the settings log for the respective system size for the time to enter.

After making your selection, press the **NEXT** key.

d) "FILL" setting (filling the brine tank)

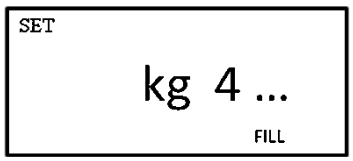

The number **"4"** will appear (for step 4)
and **"FILL"** below,
and a number followed by the unit [kg] will appear on the right of the display.

Use the arrow keys ▽ △ to select the converted (internal) amount of salt to add to the brine tank.

Please refer to the settings log for the respective system size for the time to enter.

After making your selection, press the **NEXT** key.

NOTE

Since no time will be assigned to the END phase, the END phase will not appear in the water softener settings.

e) Capacity setting

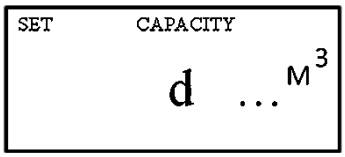

Enter the calculated system capacity in **m³×°dH**
even.

VAD TT	Capacity m³×°dH
25	90
50	180
75	270
125	450

After making your selection, press the **NEXT** key.

f) Volume-based

"AUTO" is the calculated capacity and remaining capacity in [m³].

- If the value is set to **"AUTO"**, the capacity will automatically be calculated and the reserve capacity automatically accepted.
- If the value is set to **"oFF"**, regeneration will only be based on the day overwrite, so purely timed.
- Use the arrow key ▽ to scroll down and set the user's desired volume output. In this case, the number will count down from 5,700 cbm.
- In set **REGEN "AUTO"**, moving the arrow key △ up will increase the meter from 0.02 cbm.

  (Set REGEN Auto recommended)

After making your selection, press the **NEXT** key.

g) Checking regeneration

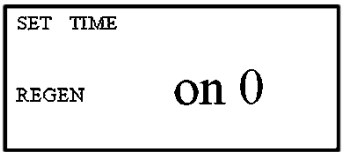

- **"NORMAL"** - regeneration starts at the set time once the set amount of water has been reached (e.g. at 2:00 am).

- **"Normal" "on 0"** regeneration starts at the programmed time,
  including if the capacity has not reached 0.
  However, if capacity is at 0, regeneration will begin if water has not been drawn for 10 minutes.
- **"on 0"** regeneration starts immediately if the capacity is at m³ 0 (once the programmed amount of water has been reached).

NOTE

Duplex systems must always be set to "on 0" in the display!

After making your selection, press the **NEXT** key.

h) Relay 1

Set rLY 1 off will appear (rLY meaning relay), if relay 1 is not being used confirm - **Off** by pressing **NEXT**.

i) Relay 2

Set rLY 2 off will appear (rLY meaning relay), if relay 2 is not being used confirm - **Off** by pressing **NEXT**.

j) Salt

Set Salt and **Set kg off remaining** flash, alternating. Please do not take any action and press the **NEXT** key.

4.5 Installation / user displays (Level 3)

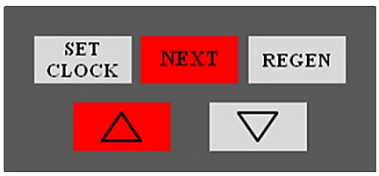

Simultaneously press the function keys **NEXT** and △
for approx. 5 seconds to access level 3

Hold the keys until the level 3 display opens.

NOTE

If the step does not appear within 5 seconds, the control valve is locked.
To unlock, successively press: ▽ NEXT △ SET CLOCK.

a) Setting the total hardness

In this step you can determine the total hardness value determined in Level 1 / Step e.

Use the arrow keys ▽ △ to set the desired value.

The preset is 20°dH. After making your selection, press the **NEXT** key.

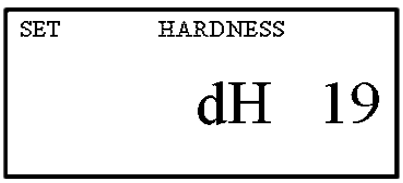

b) Setting the blended water hardness

Here, enter the value 0.
The waste hardness preset only affects the remaining capacity.
Select waste hardness 0.

After making your selection, press the **NEXT** key.

c) Day overwrite

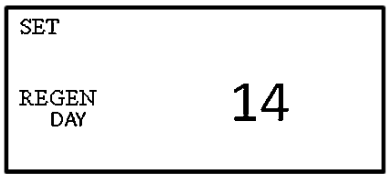

In this step you can set the number of days
until the next regeneration even if the amount of water

has not been used.

The preset is 4 days (recommended)

You can choose from 0 to 28 days.
You can also disable this function
by selecting **"OFF"**.

After making your selection, press the **NEXT** key.

d) Regeneration settings - hours

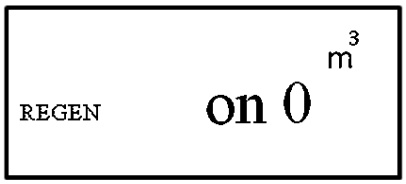

If 0 = regeneration immediately starts when the set
total capacity has been reached ⇨ Display reads: "--:--".

After making your selection, press the **NEXT** key.

NOTE

Duplex systems must always read "on 0" in the display.

This setting is configured under Level 4 / Step g regeneration control.

After selecting option "on 0", the information under Level 3 automatically also jumps to "on 0".

4.6 General control displays

To view the current water flow rate, the remaining capacity, briefly press the function key **NEXT** under Level 1. The display will show the volume flow rate (in litres per minute)

After pressing the **NEXT** key again, the display will change to **CAPACITY REMAINING**.

CAPACITY REMAINING shows the capacity remaining (in m³) until the next regeneration.

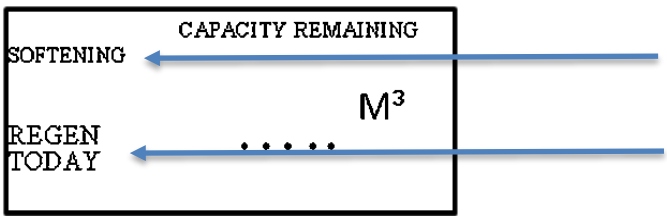

SOFTENING flashes when the turbine is turning during operation (depending on the setting under Level 2).

REGEN TODAY flashes when the unit will regenerate during the night
(depending on setting in level 2).

Press the **NEXT** key.
The display will now return to the first level and show the time.

4.7 Diagnostic displays during the first phase

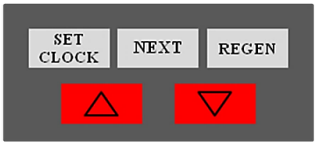

Simultaneously press the △ and ▽ keys to access the diagnostic display for the first phase.

Hold the keys 5 seconds until the diagnostics display opens.

NOTE

If the step does not appear within 5 seconds, the control valve is locked.
To unlock, successively press: ▽ NEXT △ SET CLOCK.

a) REGEN DAY

This shows the **number of days since the last regeneration**.

Press the **NEXT** key.

b) REGEN

The second display shows the **volume treated since the last regeneration** in [m³].

Press the **NEXT** key.

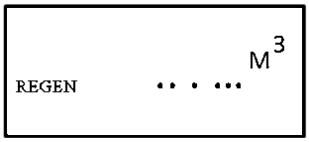

c) DAY

This display shows the **remaining capacity for the past 6 days**.

- If the display shows 0, this is the remaining capacity today.
- If the display shows 1, this is the remaining capacity yesterday.
- A readout of 2 - 6 indicates the remaining capacity the past 2 - 6 days.

The display automatically switches to the remaining capacity for each day.

To switch between the different days, press the arrow keys △ and ▽.

Press the **NEXT** key.

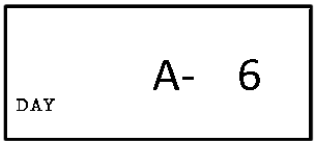

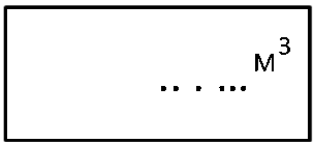

d) DAY

This display shows the soft water produced the past 63 days in [m³].

- If the display shows 1, this is the soft water produced yesterday.
- A readout of 2 - 63 indicates the soft water produced the past 2-63 days.

The display automatically switches to the soft water produced each day.

To switch between the different days, press the arrow keys △ and ▽.

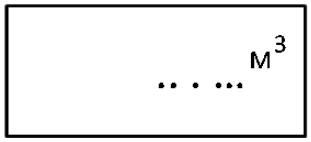

e) LITRES / MIN

The last display shows the maximum volume flow rate over the past 7 days.

Press the **NEXT key.**

The display will now return to the first level (main menu) and show the time.

NOTE

Diagnostic displays can be reset to 0 by pressing NEXT and pressing ▽ for 5 seconds under level 1 and pressing △ and ▽ for 5 seconds under level 2.

4.8 Diagnostic displays in phase two

Simultaneously press the △ and ▽ keys to open the diagnostic display in the second phase.

Hold the keys until the display opens.

Once in diagnostic display I, press the △ and ▽ keys again to open diagnostic display II.

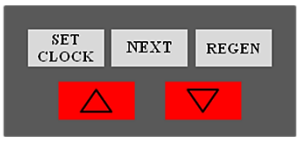

After selecting the desired step, press the **NEXT** key to go to the next program step.

NOTE

If the step does not appear within 5 seconds, the control valve is locked. To unlock, successively press: ▽ NEXT △ SET CLOCK.

a) DAY

The first display shows the **number of days** the system has been in use.

Press the **NEXT** key.

b) REGEN

This display shows the **number of regenerations** since the system was put into service.

Press the **NEXT** key.

c) TOTAL VOLUME

The last display shows the total volume since the system was put into service in [m³].

Press the **NEXT** key.

The display will now return to the first level (main menu) and show the time.

5 Commissioning

After installing, programming and connecting the system to the mains or connecting the drain hose to a drain pipe you can open the untreated water supply to the system, thus pressurise the system. Be sure the bypass at the inlet to the main control valve is also set to free flow.

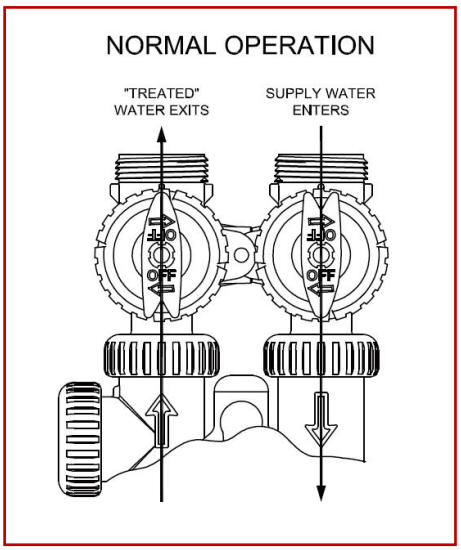

Image 11. Bypass operation

5.1 Filling the brine tank

- Add water to the brine tank until the level is 20 cm above the salt bottom.
- Add salt.

NOTE
Only DIN EN 973 **(before 2002: DIN 19604) evaporated salt is suitable for regeneration.** **We recommend only using high purity tablet salt per DIN EN 973, type A, with our water softeners**

5.2 Backwashing prior to initial use

The ion exchange resin in both pressure tanks must be backwashed once before using the system. To do so, manually start backwash/regeneration on both pressure tank (successively). First run the first step (backwash), skip the brine step, then run rinse and skip fill.

Important:

Briefly press the REGEN key during the rinse and regeneration phase to skip to the next step. The control unit will only respond to the key being pressed if the countdown for the current process is already running in the display. Pressing the key when the motor in the valve is still running and the system is switching over will have no effect.

5.2.1 Backwashing the right pressure tank

Step 1.

Press the **REGEN** key for at least 5 seconds.

The valve head will move into the backwash position.

The display will read **BACKWASH** with a countdown above it.

You will hear water rushing in the system. Let the countdown run.

When the **BACKWASH** countdown reaches "zero", the valve will make motor sounds and switch over and the display will read **dn BRINE** and another countdown.

Step 2.

Right after the countdown starts, press the **REGEN** key.

The valve head will move to the brine position.

The display will read **BRINE** with a countdown above it.

Step 3.

Right after the countdown for the BRINE process starts, press the **REGEN** key.

The valve head will move to the RINSE position (fast rinse).

The display will read **RINSE** with a countdown above it.

Let the RINSE process run until it is finished.

When the countdown reaches "zero" during **RINSE**, the valve will make motor sounds and switch over, and the display will read **FILL.** A countdown will start again.

Step 4.

Right after the countdown for the FILL process starts, press the **REGEN** key.

The valve head will move from the FILL position back to the operating position.

The display will show the top user level along with the time.

5.2.2 Backwashing the left pressure tank

Once the right pressure tank has been backwashed, the sequence described under item 5.2.1 will be repeated. The main control valve will now repeat the described steps for the second pressure tank (left pressure tank), since the internal switch valve switched the water flow to the left pressure tank.

Step 1 for left pressure tank

Press the **REGEN** key for at least 5 seconds.

The valve head will move into the backwash position.

The display will read **BACKWASH** with a countdown above it.

You will hear water rushing in the system. Let the countdown run.

When the **BACKWASH** countdown reaches "zero", the valve will make motor sounds and switch over and the display will read **dn BRINE** and another countdown.

Step 2 for left pressure tank.

Right after the countdown starts, press the **REGEN** key.

The valve head will move to the brine position.

The display will read **BRINE** with a countdown above it.

Step 3 for left pressure tank.

Right after the countdown for the BRINE process starts, press the **REGEN** key.

The valve head will move to the RINSE position (fast rinse).

The display will read **RINSE** with a countdown above it.

Let the RINSE process run until it is finished.

When the countdown reaches "zero" during **RINSE**, the valve will make motor sounds and switch over, and the display will read **FILL.** A countdown will start again.

Step 4 for left pressure tank.

Right after the countdown for the FILL process starts, press the **REGEN** key.

The valve head will move from the FILL position back into the operating position. The display will show the top user level along with the time.

Both pressure tanks have now been backwashed and the system can be put into service. Since the ion exchanger resin comes in regenerated form, regenerating the two pressure tanks is not required.

5.2.3 Important information about brine formation time

However, if the user wishes to regenerate both pressure tanks, it's important to note it takes 4 hours for saturated brine to form in the brine tank.

You must wait this long before regenerating the first pressure tank after adding water and regenerating salt to the brine tank before regenerating.

Once the first pressure tank has been regenerated, wait another 4 hours before regenerating the second pressure tank.

NOTE
It takes at least 4 hours for the necessary brine concentration to form in the brine tank. Since the brine only starts forming when the fill process starts at the end of the regeneration process (regeneration time 1-2 h), the time between two regenerations must be at least 6 hours.

5.3 Non-stop operation

The water softener is fully automatic.

- When the capacity of a pressure tank is depleted, the main control valve stops operating this pressure tank and starts regenerating this pressure tank.
- At the same time the main control valve switches the water flow to the second pressure tank.
- The second pressure tank assumes operation.
- When the capacity of the second pressure tank is depleted, the main control valve stops operating this pressure tank and starts regenerating this pressure tank.
- The first pressure tank assumes operation.

This process repeats continuously

6 Water softener operating cycles

6.1 Operation (non-stop operation)

Untreated water flows through the main control valve and into the pressure tank.

The pressure tank is filled with special resin for ion exchange. The untreated water flows through the resin bed from top to bottom. During this process, the softening resin removes Mg and Ca ions.

The treated water flows through the lower nozzle at the bottom of the resin bed into the riser and exits the system through the water outlet of the main control valve to be used.

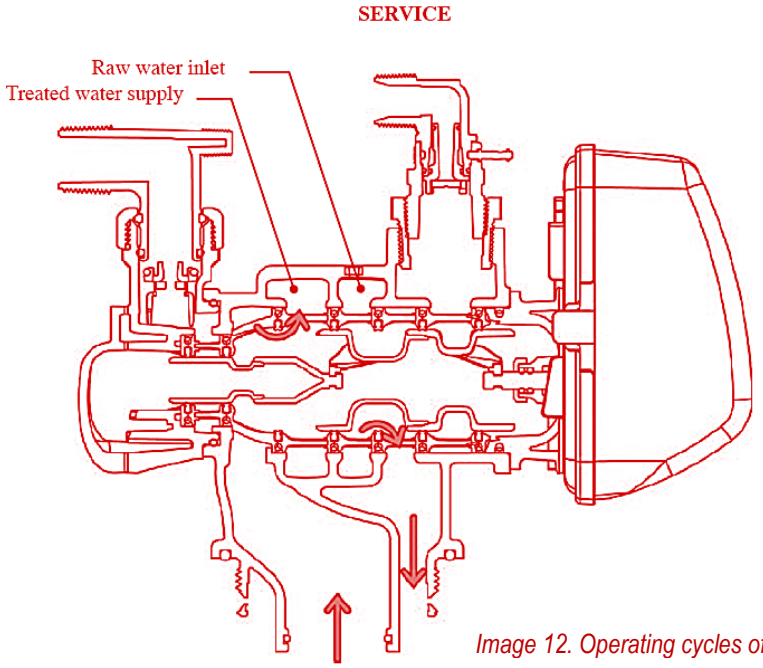

Image 12. Operating cycles of the water softener

6.2 Backwashing (cleaning and loosening the resin bed)

The main control valve switches the system in the direction of the water flow. The water flows through the resin bed from the bottom up. This loosens the resin bed and removes any dirt particles.

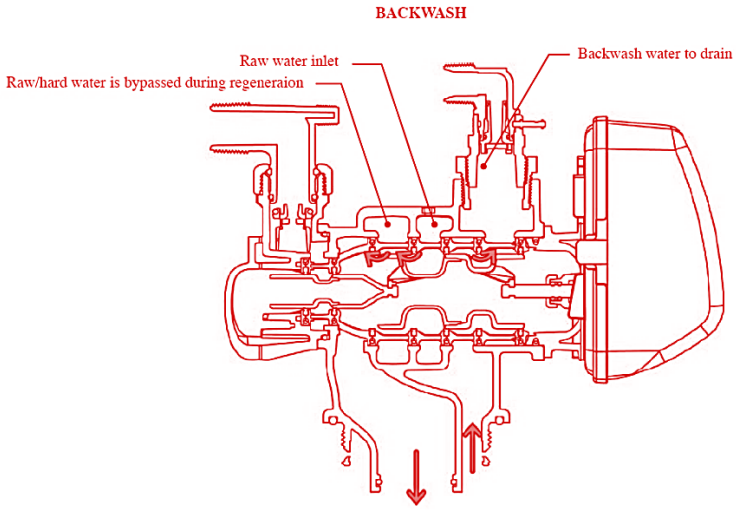

Image 13. Operating cycles of softener backwashing

6.3 Brine (resin bed regeneration)

The main control valve takes concentrated brine in the brine tank in through the sole valve via a Venturi nozzle (injector). The brine mixed with the motive water in the Venturi nozzle flows through the exchanger resin from the bottom up.

The Ca and Mg ions bound in the exchanger resin are replaced with the highly abundant sodium ions in the brine.

Once the injector no longer takes in brine, the motive water automatically flows through the exchanger resin and eliminates the remaining brine from the pressure tank. This process is also referred to as "slow rinse".

The removed ions and excess brine exit the control valve through the drain outlet.

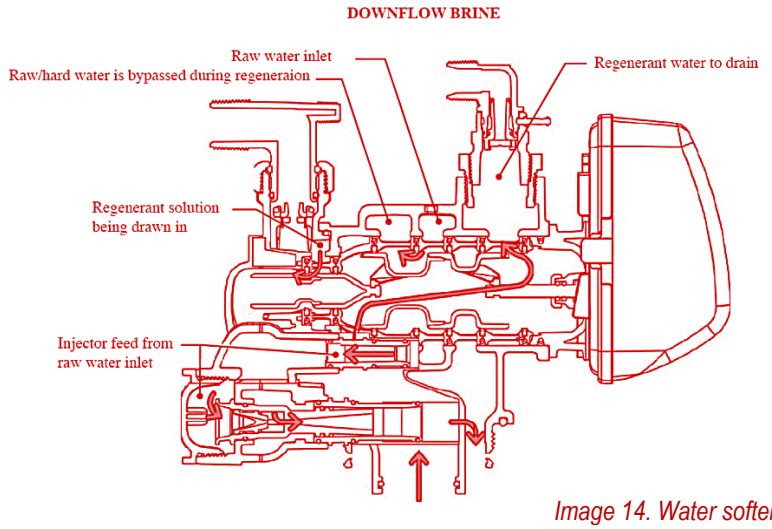

Image 14. Water softener operating cycles – dn brine

6.4 Fast rinse

After salting and the slow rinse, the resin bed is flushed with water at a higher speed from above to ensure there is no regenerating salt remaining in the resin bed. This process is also referred to as rinsing.

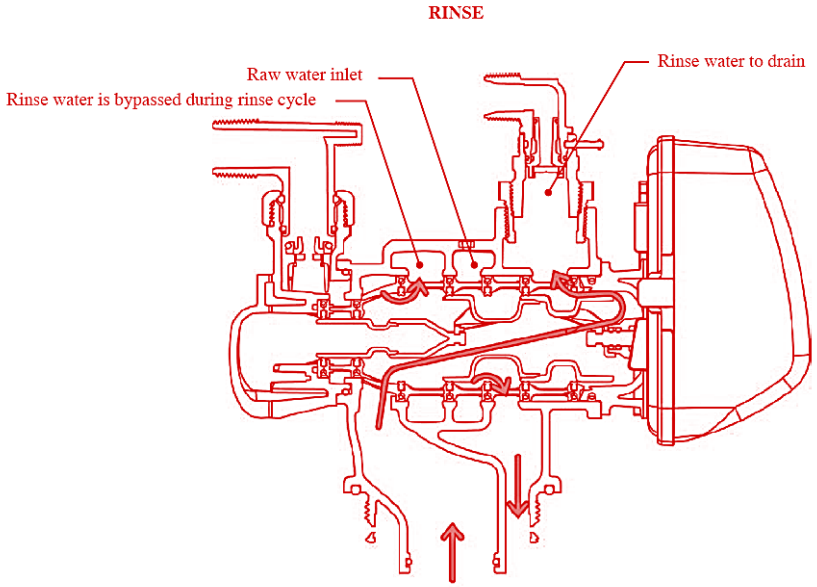

Image 15. Water softener operating cycles – fast rinse

6.5 Filling the brine tank

During the last step of the regeneration process, the main control valve returns a programmed amount of water through the brine hose and into the brine tank.

When this water enters the brine tank, new brine starts to form for the next regeneration.

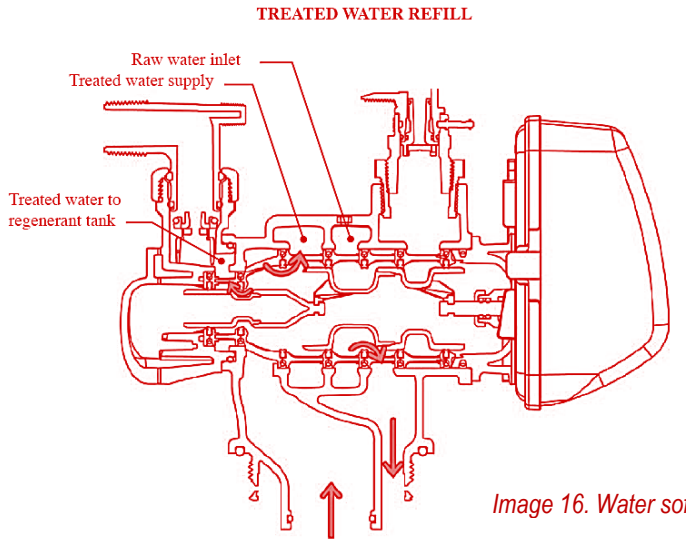

Image 16. Water softener operating cycles – filling the brine tank

7 Main control valve technical details

7.1 Image and drawing of the main control valve

Image 17. Clack WS 1 CI Twin-Twin control valve.

The fully automatic Clack WS 1 CI Twin-Twin main control valve, made from Noryl®, is designed to control all cycles of a water softener.

The main control valve regulates the flow rates and direction of flow for backwash, salting, flushing and, if necessary, refilling the brine tank.

The order and duration of the individual processes (backwashing, brine intake, fast rinse and filling a brine take) is programmable.

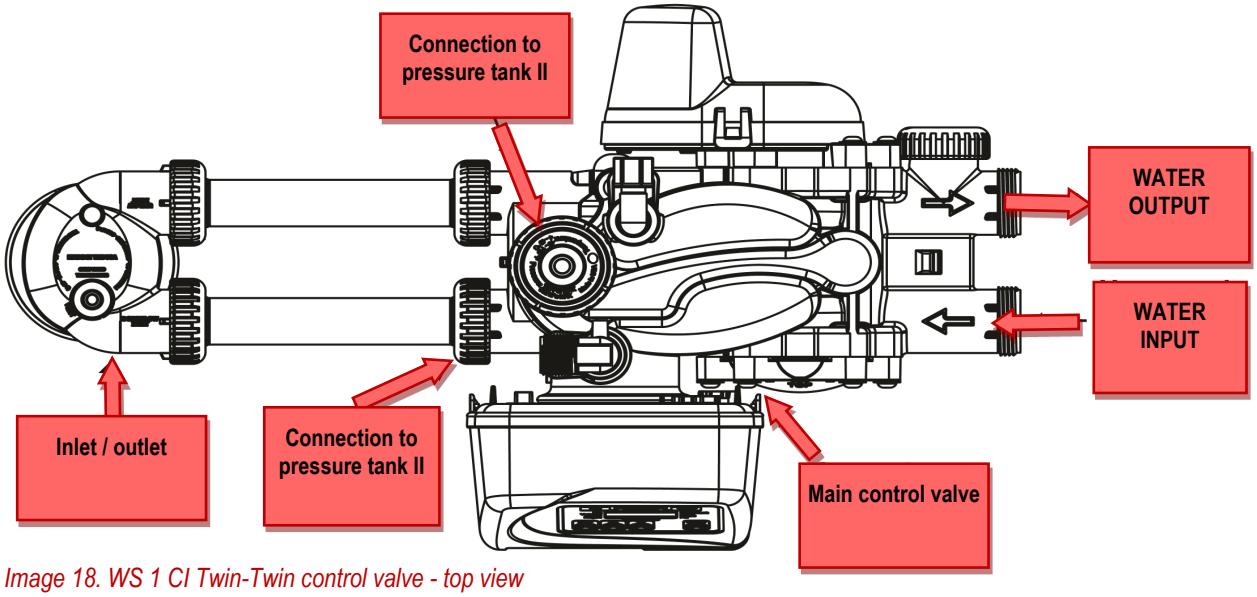

Image 18. WS 1 CI Twin-Twin control valve - top view

Table 1. Type and size of Drain Line Flow Control (DLFC-Throttle inserts) and DLFC housings (VAD-TT-Softeners)

Unit	DLFC-Housing	Size	DLFC-Type	Flow Rate	Flow Rate
VAD 25 TT	V 3158	13 mm (¾")	V3162-032	3,2 gpm	12.1 l/min
VAD 50 TT	V 3158	13 mm (¾")	V3162-042	4,2 gpm	15,9 l/min
VAD 75 TT	V 3158	13 mm (¾")	V3162-053	5,3 gpm	20.1 l/min
VAD 125 TT	V 3158	13 mm (¾")	V3162-075	7,5 gpm	28.4 l/min

Table 2. Colour-Code and type of Injectors of the VAD TT Softeners

Anlagentyp	Injector - Type	Injector Colour	Type of Pressure Tank
VAD 25 TT	V3010-1D	RED	9“
VAD 50 TT	V3010-1F	BLUE	12“
DF 300	V3010-1G	YELLOW	13“
VAD 125 TT	V3010-1I	ORANGE	16“
DF120, DF200	V3010-1E	WHITE	10“

7.2 Explosive drawing - main control valve

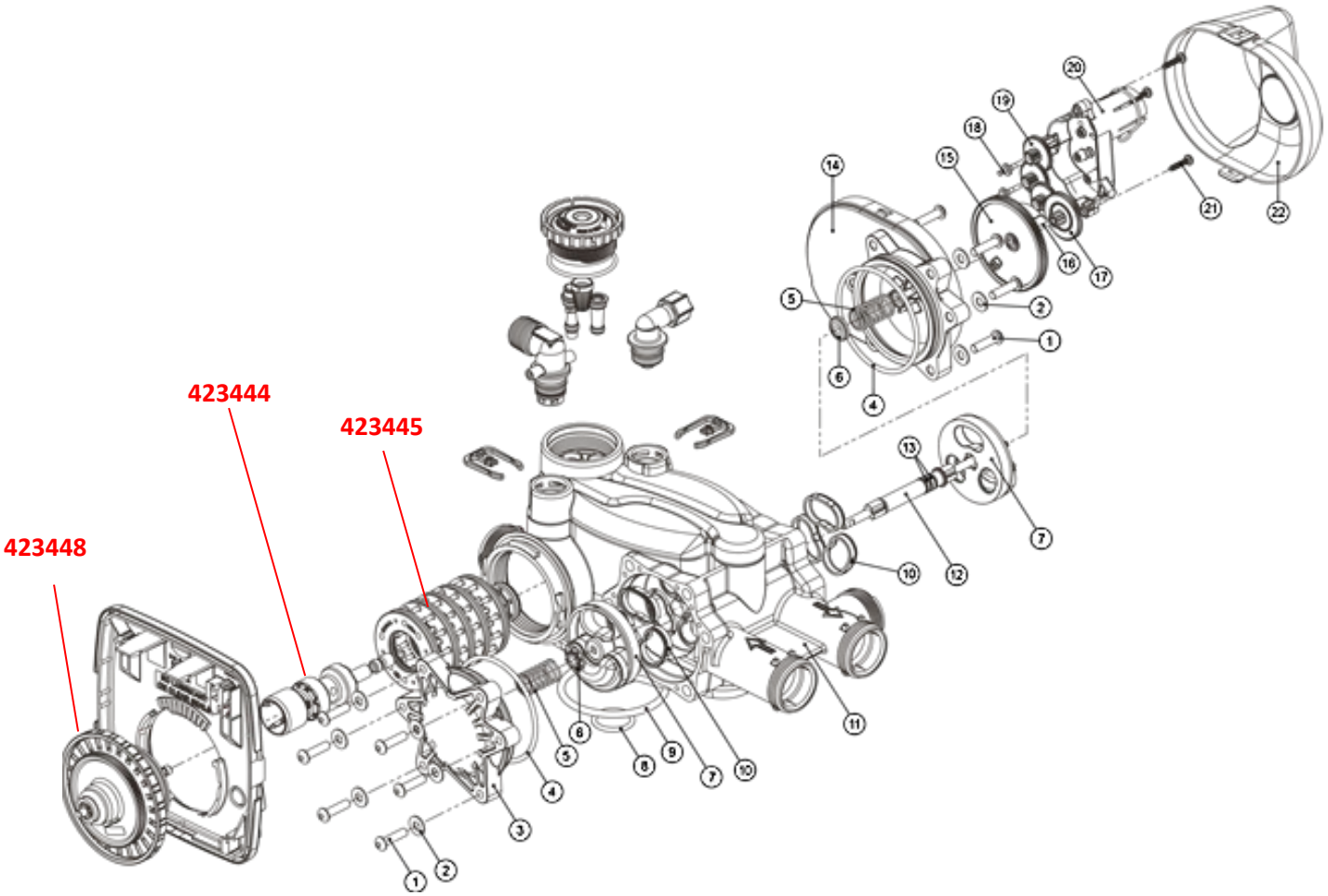

Image 19. Control valve WS 1 CI Twin-Twin spare parts

7.3 Bypass valve

Function:

- The bypass valve is used to disconnect the main control valve from the installation for repairs and maintenance.
- Easy to remove. No tools required for installation/removal.
- The 1" bypass with full passage has four settings, including a service position, which allows the user to perform any necessary work. During this time untreated water is available for use.

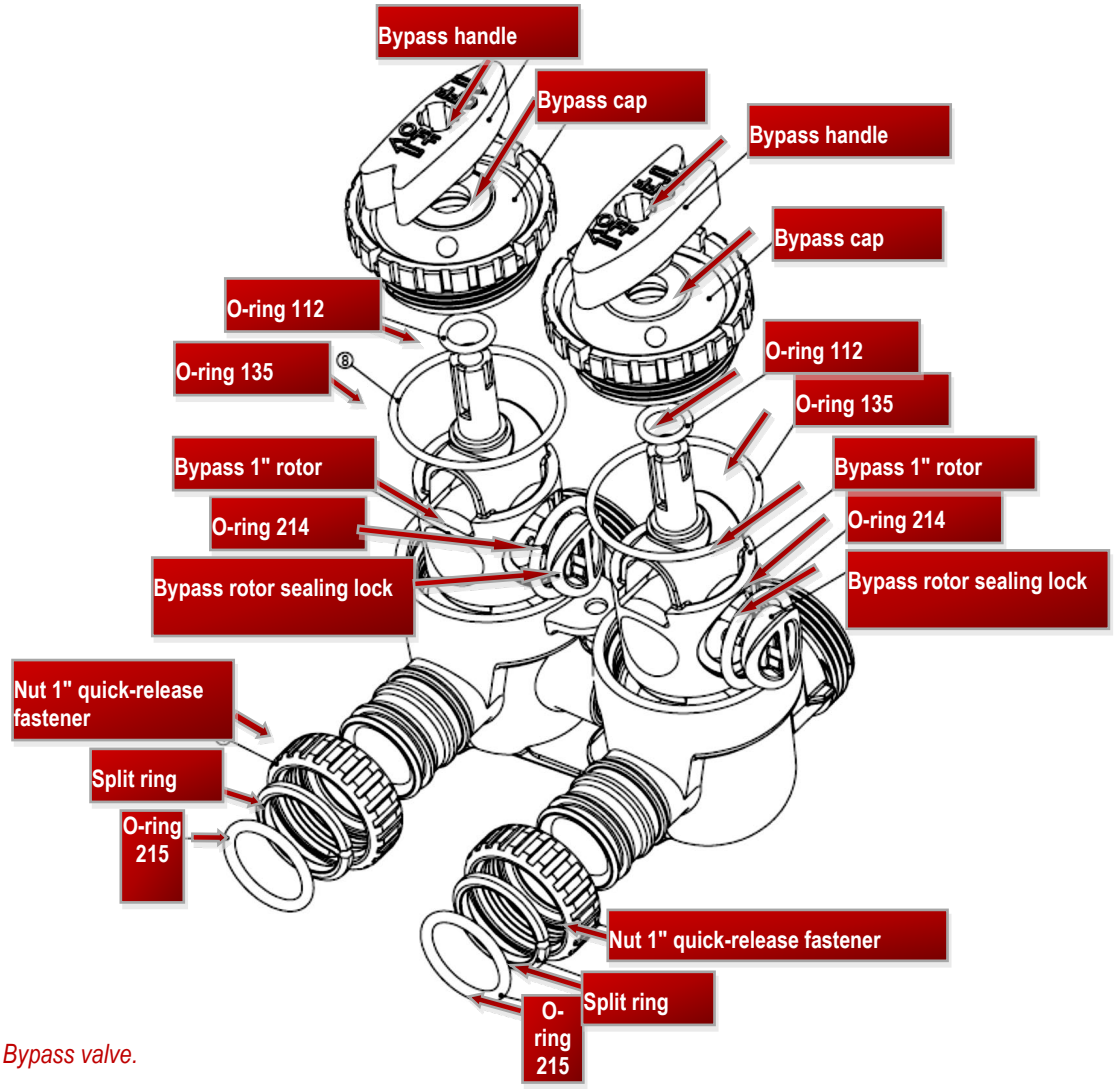

Image 20. Bypass valve.

Material:

- The bypass body and the rotary slides are made from Noryl®.
- The swivel nuts and caps are made from glass fibre reinforced PP.
- All O-ring gaskets are made from self-lubricating EPDM.

NOTE

Do not apply petroleum jelly, oil or other lubricants to the O-rings.

If necessary, use silicone lubricant.

Use the special installation spanner to loose or tighten threaded joints.

Never use any type of pliers.

Do not apply sealants to the threads.

You can use plumber's tape to seal the port.

NOTE

The design connection fittings allow radial movement of about 2°. This enables compensating for any installation tension.

However, they are not designed to e.g. absorb the weight of the piping or other fittings.

The bypass has two replaceable rotary slides which can be turned separately using the red lever. The levers indicate the direction of water flow. The rotary slides allow four valve positions:

1. Normal operating position: The position of the red levers indicates the current direction of flow. In the regular operating position, water flows in on the right and out the right side after the water has run through the system.

2. Bypass operating position: The water flows in on the right and out the left side without running through the system. Untreated water is available for use.

3. Diagnostics position: The right lever points toward the valve and the left points at the middle of the bypass valve. The input pressure is applied to the main control valve. This ensures water cannot exit the valve.

4. Lock position The right lever points at the middle of the bypass valve. The left lever is pointing in the direction of flow and the clean water installation is locked. If water is available on the clean water end, this means there is another bypass somewhere in the installation.

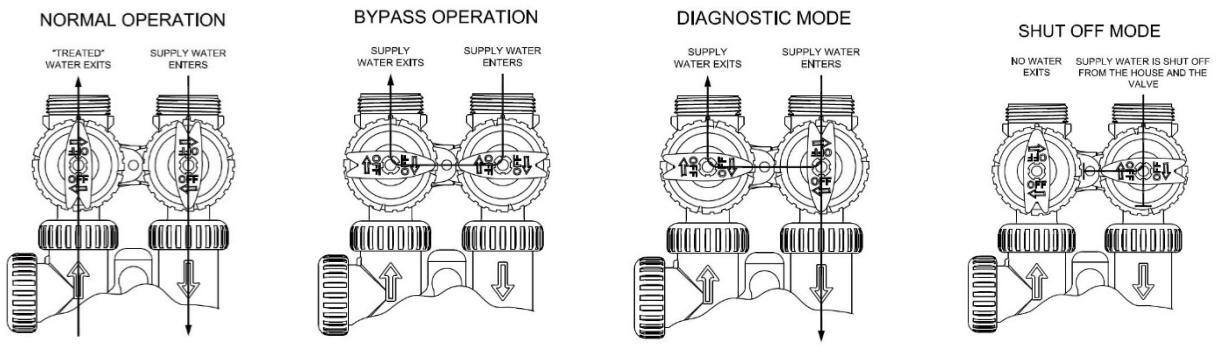

Image 21. Bypass valve operation.

8. Troubleshooting (control valve)

Problem	Possible Cause	Solution
1. No Display on PC Board	a. No power at electric outlet	a. Repair outlet or use working outlet
	b. Control valve Power Adapter not plugged into outlet or power cord end not connected to PC board connection	b. Plug Power Adapter into outlet or connect power cord end to PC Board connection
	c. Improper power supply	c. Verify proper voltage is being delivered to PC Board
	d. Defective Power Adapter	d. Replace Power Adapter
	e. Defective PC Board	e. Replace PC Board
2. PC Board does not display correct time of day	a. Power Adapter plugged into electric outlet controlled by light switch	a. Use uninterrupted outlet
	b. Tripped breaker switch and/or tripped GFI	b. Reset breaker switch and/ or GFI switch
	c. Power outage	c. Reset time of day. If PC Board has battery back up present the battery may be depleted. See Front Cover and Drive Assembly drawing for instructions.
	d. Defective PC Board	d. Replace PC Board
3. Display does not indicate that water is flowing. Refer to user instructions for how the display indicates water is flowing	a. Bypass valve in bypass position	a. Turn bypass handles to place bypass in service position
	b. Meter is not connected to meter connection on PC Board	b. Connect meter to three pin connection labeled METER on PC
	c. Restricted/ stalled meter turbine	c. Remove meter and check for rotation or foreign material
	d. Meter wire not installed securely into three pin connector	d. Verify meter cable wires are installed securely into three pin connector labeled METER
	e. Defective meter	e. Replace meter
	f. Defective PC Board	f. Replace PC Board
4. Control valve regenerates at wrong time of day	a. Power outage	a. Reset time of day. If PC Board has battery back up present the battery may be depleted. See Front Cover and Drive Assembly drawing for instructions.
	b. Time of day not set correctly	b. Reset to correct time of day
	c. Time of regeneration set incorrectly	c. Reset regeneration time
	d. Control valve set at “on 0” (immediate regeneration)	d. Check programming setting and reset to
	e. Control valve set at “NORMAL + on 0” (delayed and/ or immediate)	e. Check programming setting and reset to
5. Time of day flashes on and off	a. Power outage	a. Reset time of day. If PC Board has battery back up present the battery may be depleted. See Front Cover and Drive Assembly drawing for instructions.
6. Control valve does not regenerate automatically when the correct button(s) is depressed and held. For TC valves the buttons are ▲ &▼ . For all other valves the button is REGEN	a. Broken drive gear or drive cap assembly	a. Replace drive gear or drive cap assembly
	b. Broken Piston Rod	b. Replace piston rod
	c. Defective PC Board	c. Defective PC Board

Problem	Possible Cause	Solution
7. Control valve does not regenerate automatically but **does** when the correct button(s) is depressed and held. For TC valves the buttons are ▲ &▼ . For all other valves the button is REGEN	a. Bypass valve in bypass position	a. Turn bypass handles to place bypass in service position
	b. Meter is not connected to meter connection on PC Board	b. Connect meter to three pin connection labeled METER on PC
	c. Restricted/ stalled meter turbine	c. Remove meter and check for rotation or foreign material
	d. Incorrect programming	d. Check for programming error
	e. Meter wire not installed securely into three pin connector	e. Verify meter cable wires are installed securely into three pin connector labeled METER
	f. Defective meter	f. Replace meter
	g. Defective PC Board	g. Replace PC Board
8. Hard or untreated water is being delivered	a. Bypass valve is open or faulty	a. Fully close bypass valve or replace
	b. Media is exhausted due to high water usage	b. Check program settings or diagnostics for abnormal water usage
	c. Meter not registering	c. Remove meter and check for rotation or foreign material
	d. Water quality fluctuation	d. Test water and adjust program values accordingly
	e. No regenerant or low level of regenerant in regenerant tank	e. Add proper regenerant to tank
	f. Control fails to draw in regenerant	f. Refer to Trouble Shooting Guide number 12
	g. Insufficient regenerant level in regenerant tank	g. Check refill setting in programming. Check refill flow control for restrictions or debris and clean or replace
	h. Damaged seal/stack assembly	h. Replace seal/stack assembly
	i. Control valve body type and piston type mix matched	i. Verify proper control valve body type and piston type match
	j. Fouled media bed	j. Replace media bed
9. Control valve uses too much regenerant	a. Improper refill setting	a. Check refill setting
	b. Improper program settings	b. Check program setting to make sure they are specific to the water quality and application needs
	c. Control valve regenerates frequently	c. Check for leaking fixtures that may be exhausting capacity or system is undersized
10. Residual regenerant being delivered to service	a. Low water pressure	a. Check incoming water pressure – water pressure must remain at minimum of 25 psi
	b. Incorrect injector size	b. Replace injector with correct size for the application
	c. Restricted drain line	c. Check drain line for restrictions or debris and clean
11. Excessive water in regenerant tank	a. Improper program settings	a. Check refill setting
	b. Plugged injector	b. Remove injector and clean or replace
	c. Drive cap assembly not tightened in properly	c. Re-tighten the drive cap assembly
	d. Damaged seal/ stack assembly	d. Replace seal/ stack
	e. Restricted or kinked drain line	e. Check drain line for restrictions or debris and or un-kink drain line
	f. Plugged backwash flow controller	f. Remove backwash flow controller and clean or replace
	g. Missing refill flow controller	g. Replace refill flow controller

Problem	Possible Cause	Solution
12. Control valve fails to draw in regenerant	a. Injector is plugged	a. Remove injector and clean or replace
	b. Faulty regenerant piston	b. Replace regenerant piston
	c. Regenerant line connection leak	c. Inspect regenerant line for air leak
	d. Drain line restriction or debris cause excess back pressure	d. Inspect drain line and clean to correct restriction
	e. Drain line too long or too high	e. Shorten length and or height
	f. Low water pressure	f. Check incoming water pressure – water pressure must remain at minimum of 25 psi
13. Water running to drain	a. Power outage during regeneration	a. Upon power being restored control will finish the remaining regeneration time. Reset time of day.
	b. Damaged seal/ stack assembly	b. Replace seal/ stack assembly
	c. Piston assembly failure	c. Replace piston assembly
	d. Drive cap assembly not tightened in properly	d. Re-tighten the drive cap assembly
14. E1, Err – 1001, Err – 101 = Control unable to sense motor movement	a. Motor not inserted full to engage pinion, motor wires broken or disconnected	a. Disconnect power, make sure motor is fully engaged, check for broken wires, make sure two pin connector on motor is connected to the two pin connection on the PC Board labeled MOTOR. Press NEXT and REGEN buttons for 3 seconds to resynchronize software with piston position or disconnect power supply
	b. PC Board not properly snapped into drive bracket	b. Properly snap PC Board into drive bracket and then Press NEXT and REGEN buttons for 3 seconds to resynchronize software with piston position or disconnect power supply from PC Board for 5 seconds and then reconnect.
	c. Missing reduction gears	c. Replace missing gears

Problem	Possible Cause	Solution
15. E2, Err – 1002, Err – 102 = Control valve motor ran too short and was unable to find the next cycle position and stalled	a. Foreign material is lodged in control valve	a. Open up control valve and pull out piston assembly and seal/ stack assembly for inspection. Press NEXT and REGEN buttons for 3 seconds to resynchronize software with piston position or disconnect power supply from PC Board for 5 seconds and then reconnect.
	b. Mechanical binding	b. Check piston and seal/ stack assembly, check reduction gears, check drive bracket and main drive gear interface. Press NEXT and REGEN buttons for 3 seconds to resynchronize software with piston position or disconnect power supply from PC Board for 5 seconds and
	c. Main drive gear too tight	c. Loosen main drive gear. Press NEXT and REGEN buttons for 3 seconds to resynchronize software with piston position or disconnect power supply from PC Board for 5 seconds and then reconnect.
	d. Improper voltage being delivered to PC Board	d. Verify that proper voltage is being supplied. Press NEXT and REGEN buttons for 3 seconds to resynchronize software with piston position or disconnect power supply from PC Board for 5 seconds and then reconnect.
16. E3, Err – 1003, Err – 103 = Control valve motor ran too long and was unable to find the next cycle position	a. Motor failure during a regeneration	a. Check motor connections then Press NEXT and REGEN buttons for 3 seconds to resynchronize software with piston position or disconnect power supply from PC Board for 5 seconds and
	b. Foreign matter built up on piston and stack assemblies creating friction and drag enough to time out motor	b. Replace piston and stack assemblies. Press NEXT and REGEN buttons for 3 seconds to resynchronize software with piston position or disconnect power supply from PC Board for 5 seconds and
	c. Drive bracket not snapped in properly and out enough that reduction gears and drive gear do not interface	c. Snap drive bracket in properly then Press NEXT and REGEN buttons for 3 seconds to resynchronize software with piston position or disconnect power supply from PC Board for 5 seconds and
17. Err – 1004, Err – 104 = Control valve motor ran too long and timed out trying to reach home position	a. Drive bracket not snapped in properly and out enough that reduction gears and drive gear do not interface	a. Snap drive bracket in properly then Press NEXT and REGEN buttons for 3 seconds to resynchronize software with piston position or disconnect power supply from PC Board for 5 seconds and

Problem	Possible Cause	Solution
18. Err -1006, Err – 106, Err - 116 = MAV/ SEPS/ NHBP/ AUX MAV valve motor ran too long and unable to find the proper park position Motorized Alternating Valve = MAV Separate Source = SEPS No Hard Water Bypass = NHBP Auxiliary MAV = AUX MAV	a. Control valve programmed for ALT A or b, nHbP, SEPS, or AUX MAV with out having a MAV or NHBP valve attached to operate that function	a. Press NEXT and REGEN buttons for 3 seconds to resynchronize software with piston position or disconnect power supply from PC Board for 5 seconds and then reconnect. Then re-program valve to proper setting
	b. MAV/ NHBP motor wire not connected to PC Board	b. Connect MAV/ NHBP motor to PC Board two pin connection labeled DRIVE. Press NEXT and REGEN buttons for 3 seconds to resynchronize software with piston position or disconnect power supply from PC Board for 5 seconds and
	c. MAV/ NHBP motor not fully engaged with reduction gears	c. Properly insert motor into casing, do not force into casing Press NEXT and REGEN buttons for 3 seconds to resynchronize software with piston position or disconnect power supply from PC Board for 5 seconds and then reconnect.
	d. Foreign matter built up on piston and stack assemblies creating friction and drag enough to time out motor	d. Replace piston and stack assemblies. Press NEXT and REGEN buttons for 3 seconds to resynchronize software with piston position or disconnect power supply from PC Board for 5 seconds and then reconnect.
19. Err – 1007, Err – 107, Err - 117 = MAV/ SEPS/ NHBP/ AUX MAV valve motor ran too short (stalled) while looking for proper park position Motorized Alternating Valve = MAV Separate Source = SEPS No Hard Water Bypass = NHBP Auxiliary MAV = AUX MAV	a. Foreign material is lodged in MAV/ NHBP valve	a. Open up MAV/ NHBP valve and check piston and seal/ stack assembly for foreign material. Press NEXT and REGEN buttons for 3 seconds to resynchronize software with piston position or disconnect power supply from PC Board for 5 seconds and then
	b. Mechanical binding	b. Check piston and seal/ stack assembly, check reduction gears, drive gear interface, and check MAV/ NHBP black drive pinion on motor for being jammed into motor body. Press NEXT and REGEN buttons for 3 seconds to resynchronize software with piston position or disconnect power supply from PC Board for 5 seconds and then reconnect.

9 WS1 installation spanner #423420

The WS1 installation spanner is quite helpful when working on the WS1 Clack valve.

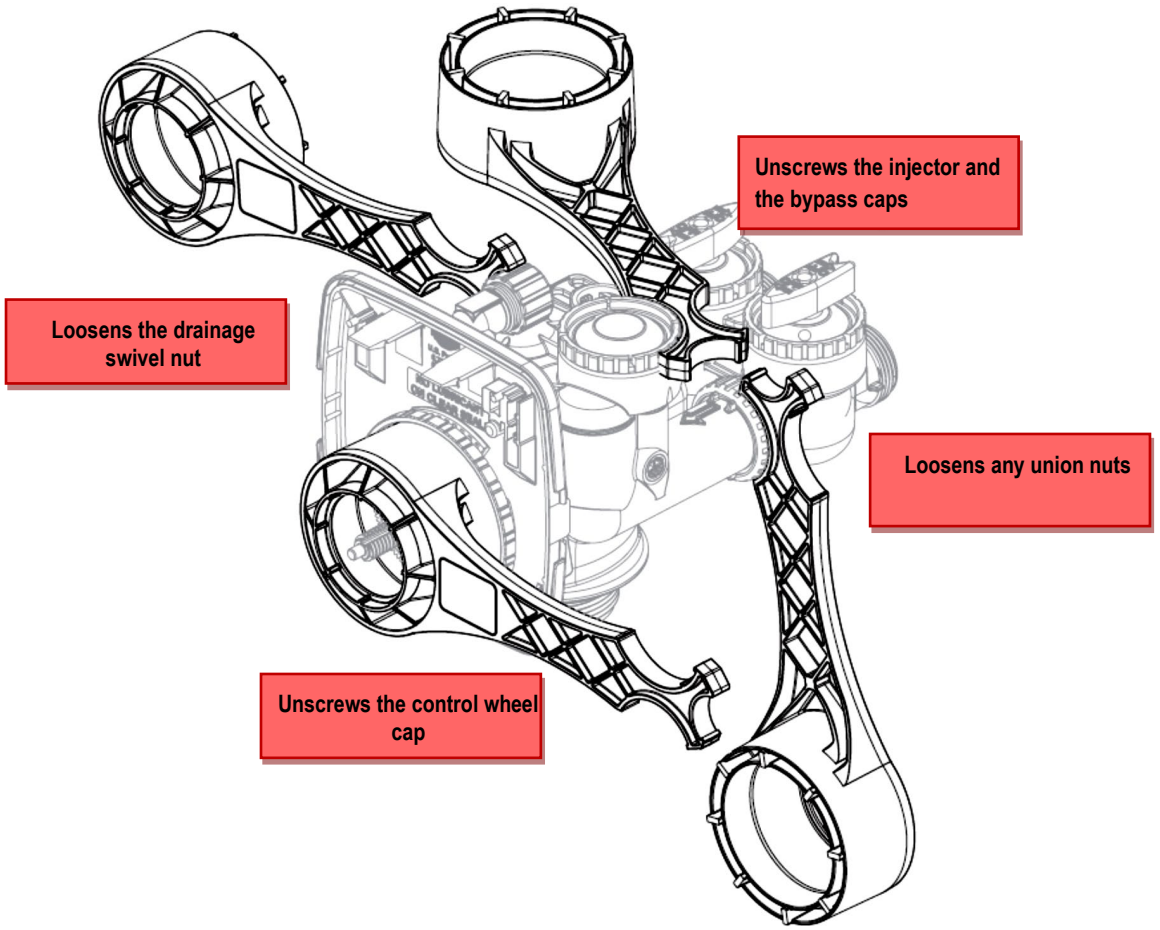

Image 22. WS1 installation spanner.

NOTE
The main control valve does not connect with screws or similar items at any point. **Only threads or spring locks are used.** **The threaded joints only need to be hand tight.**